REVISIONS				
ZONE	REV	DESCRIPTION	DATE	APPROVED

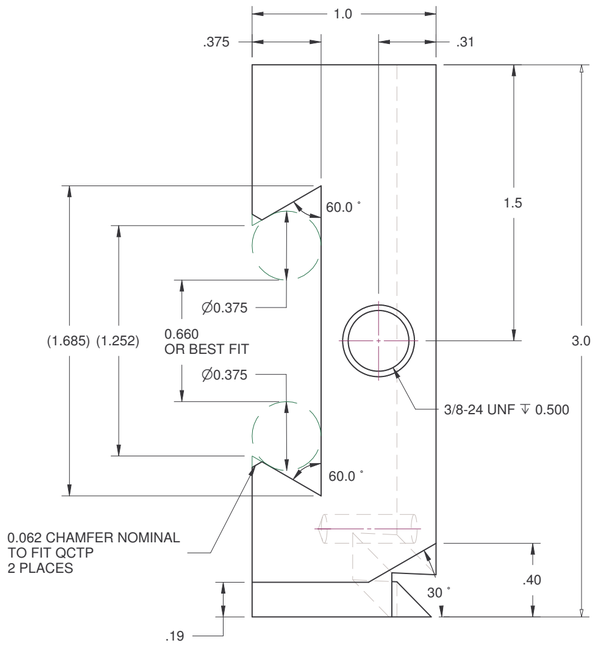

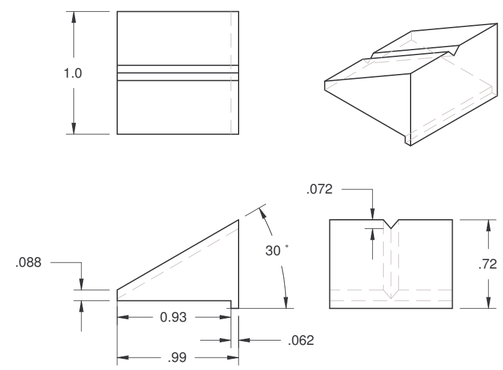

SHARPENING FIXTURE

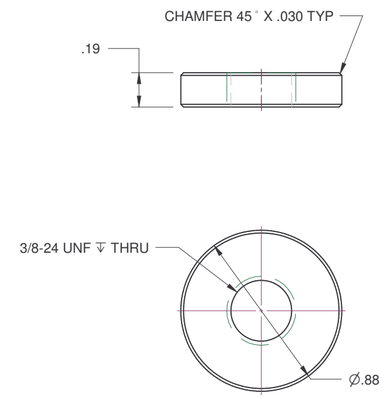

THUMB NUT

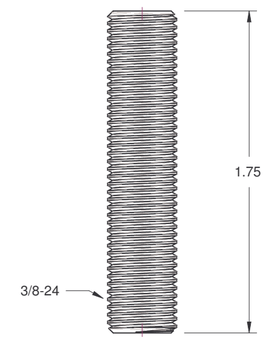

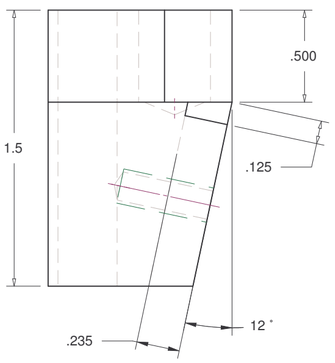

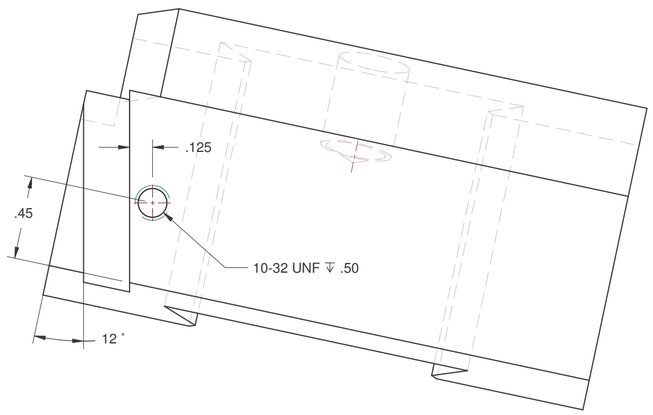

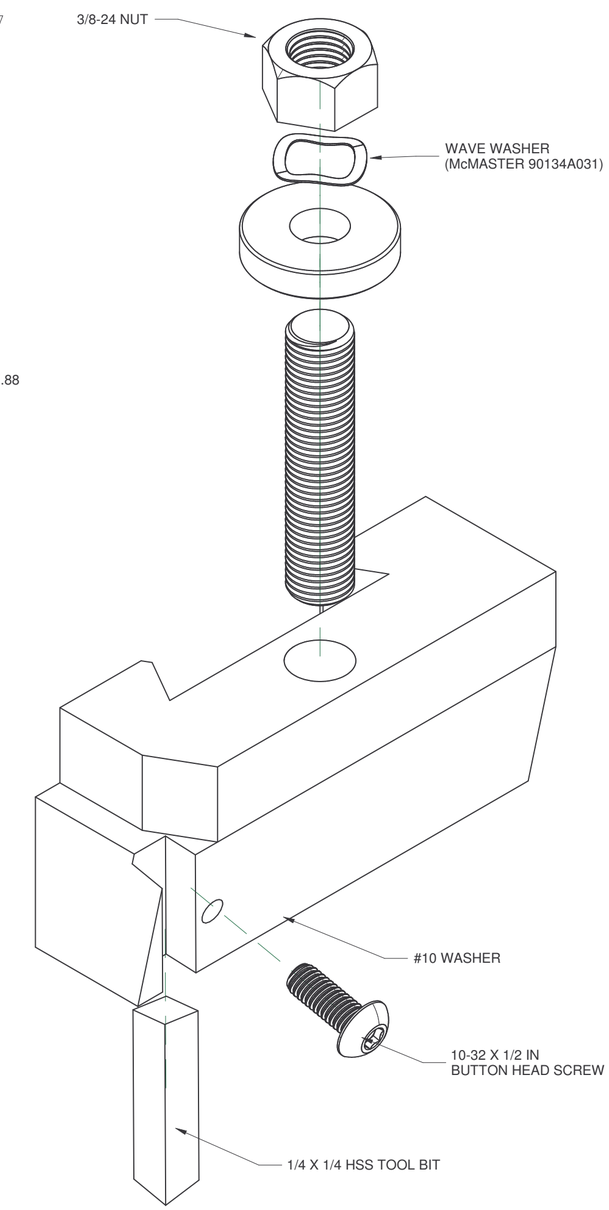

DESIGN: JOHN MORAN, www.gadgetbuilder.com	DRAWN J. Gedde	DATE	QCTP TANGENTIAL TOOLHOLDER (AXA)
	CHECKED		
	QA		
	MFG		SIZE C / FSCM NO. / DWG NO. / REV
	APPROVED		SCALE / SHEET